AIR HEATING UNIT **STAVOKLIMA**

# Installation and operation manual

# Nevada model

EN

www.stavoklima.cz

version B

# 1. Table of Contents



## Explanation of symbols used

| | | | |
|---|---|---|---|
|  | Instructions for mechanical repairs and maintenance. |  | Important safety information, technical information, data and device output. |
|  | Important electric information - read carefully - unit damage hazard in case of wrong installation. |  | Important information - please read carefully. |

# 2. Unpacking, check after transport or warehousing

## 2.1. Unpacking and check

Carefully check the delivery note attached to the delivery. For components identified as extra accessories in the delivery note (not included in the unit or installed therein), please check completeness to the parcel and perfect condition (usually delivered in a separate box). Report any serious damage to packaging or boxes, and make a basic record to the parcel transport documents. Inform the transport company or manufacturer (if the manufacturer arranges transport) immediately.

All packaging material used is environmentally friendly and may be reused or recycled. Dispose of or reprocess the non-environmentally friendly components correctly.

When unpacking, follow the procedure diagrammatically shown below.

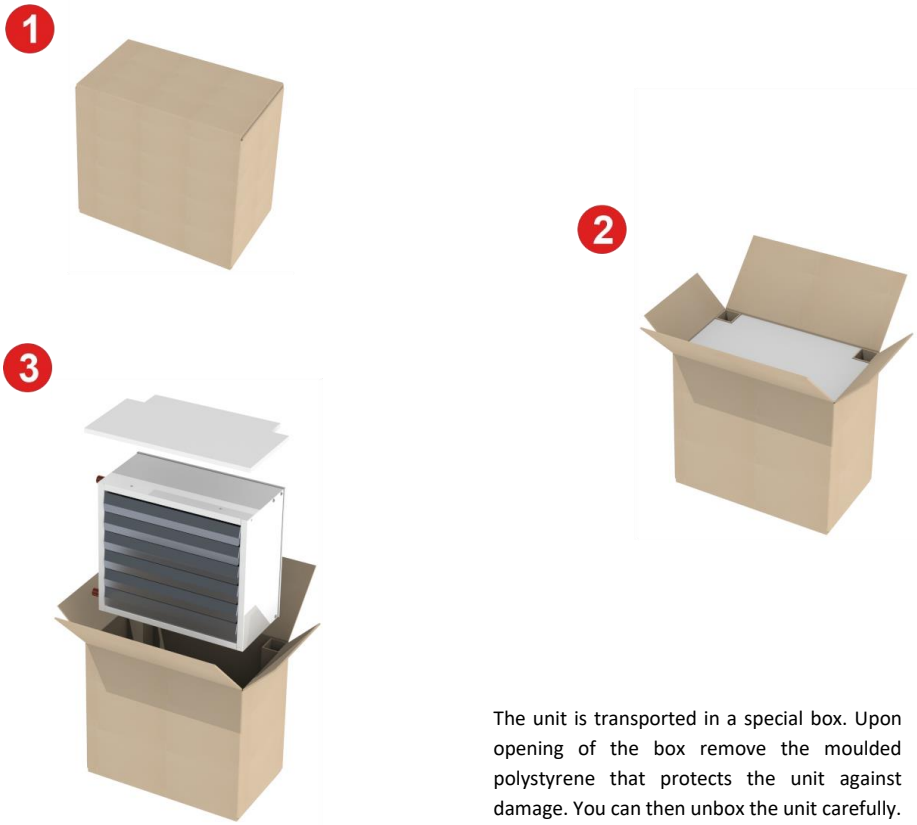


The unit is transported in a special box. Upon opening of the box remove the moulded polystyrene that protects the unit against damage. You can then unbox the unit carefully.

## 2.2. Storing of the unit, additional transport recommendations


- Observe packaging decals on the unit. The device in its packaging must not be turned or placed in transport positions other than those supplied and recommended by the manufacturer. Packaging also contains production number and unit type for easy unit type identification.
- Use genuine packaging for further transport of the unit. The packaging is tested for re-use, and a different packaging may cause damage to the unit.
- Use means with certified sufficient loading capacity for transport and handling; properly qualified persons only may operate the transport means.
- Permissible warehousing conditions: -10°C ÷ 50°C, 50-85% humidity without condensation.
- Do not remove genuine packaging until installation is complete (to avoid device damage). At least 2 persons are recommended for safe handling.
- **Upon unboxing, do never put the unit standing on exhaust splines. This is to avoid their deformation.**

# 3. Safety measures

The unit has been manufactured in line with the government decrees and Czech standards harmonized with the EU regulations mentioned in the manufacturer's declaration of conformity.

The above mentioned product complies with the following standards:
ČSN EN 60335-1 ed.3 ČSN EN 60335-2-30 ed. 3
ČSN EN IEC 61000-6-2 ed. 4 ČSN EN 61000-6-3 ed. 2

The above mentioned product complies with the following directives:

- Directive 2009/125/EC of the European Parliament and of the Council establishing a framework for the setting of eco-design requirements for energy-related products.
- Government Decree No. 118/2016 Coll. Directive 2014/35/EU of the European Parliament and of the Council on the harmonisation of the laws of the Member States relating to the making available on the market of electrical equipment designed for use within certain voltage limits.
- Government Decree No. 117/2016 Coll. Directive 2014/30/EU of the European Parliament and of the Council on the harmonisation of the laws of the Member States relating to electromagnetic compatibility.
- Government Decree No. 481/2012 Coll. (Regulation of the European Parliament and of the Council No. 2014/35/EU, Regulation of the European Parliament and of the Council No. 2011/65/EU).
- Government Decree on restriction the use of some hazardous materials found in electrical and electronic products.

Observe generally applicable national provisions and other related regulations. Unplug the unit from mains before any service intervention. Connection and earthing of the electric device or components thereof must be in line with laws applicable in the country of use. Only qualified staff may carry out any electric service works.

Observe applicable laws, in particular:

- on safety of electric and thermal appliances,
- on central heat distribution systems,
- on fire safety,
- do never exceed working pressure and temperature specified in the production label.

Follow standards and rules applicable in the country of use, in particular the fire safety of appliances and heat sources, and the fire technical properties of materials - flammability levels. Place the unit 150mm from B, C1, C2 level flammable materials, and 400mm and 1000mm for C3 level easily flammable materials in the radiation direction (air flow from the unit).

# 4. Basic information about the unit and its use

The heating unit covers losses of the heated room. The units are suitable for basic spaces, i.e., without moisture. Not suitable for dusty rooms. Air heated by either hot water or electric heater is used for heating. These devices are suitable for shops, industrial, and warehouse environments. The permitted temperature range in the space is 5–40 °C.

Full performance of the unit may be provided only when maintenance is regular and proper. All controls are accessible and well maintained.

Technical conditions for unit operation:

- max. media working temperature 90°C/pressure 1.6MPa – unless specified otherwise,
- hot water working voltage – 230V/50Hz, electric heater unit working voltage - 400V/50Hz,
- max. surrounding temperature 40 °C,
- IP rating of hot water unit - IP 54/IP rating of electric heater unit - IP 20,
- the unit is intended for basic and non-aggressive environment,
- minimum pressure difference 23kPa must be provided for use of a 2W valve (applies only to a pressure-independent valve,
- the unit is designed only for heating and not cooling.

# 5. Dimensions of the unit

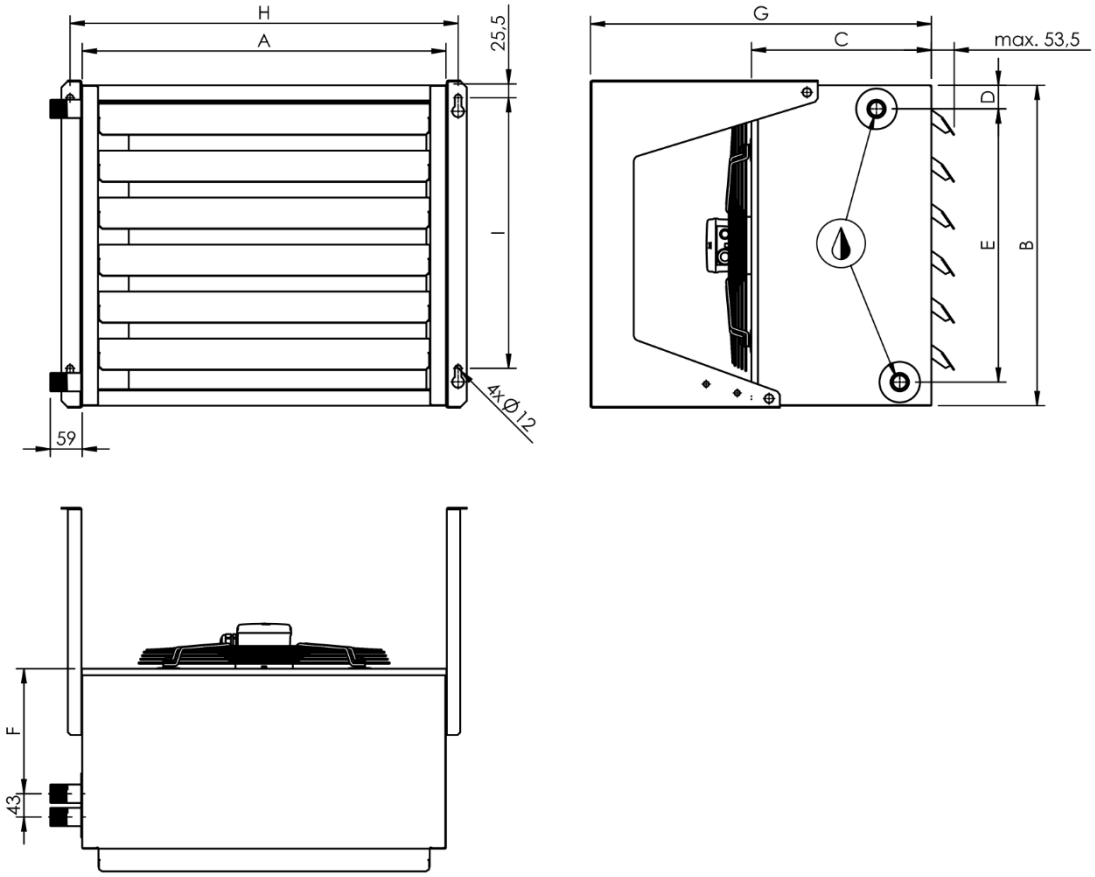


Hot water heating unit

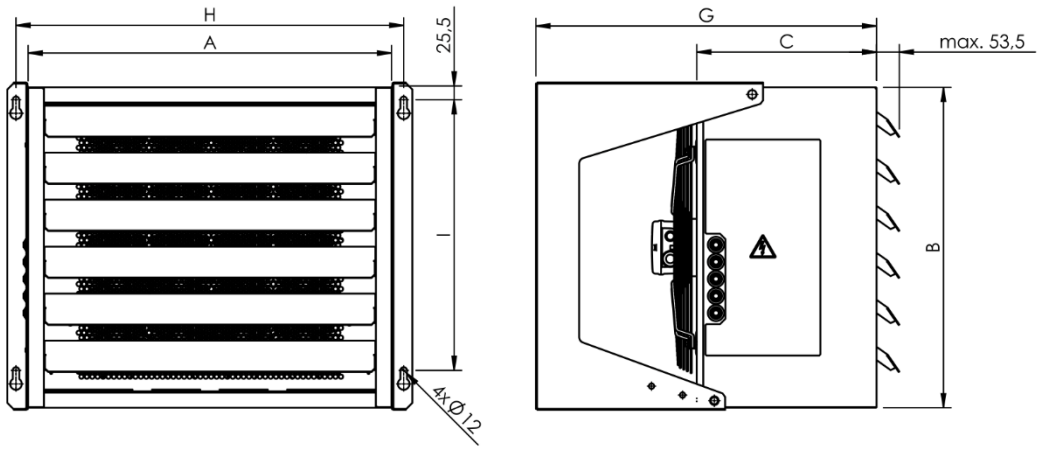


Electric heating unit

| Model | Dimension (mm) | | | | | | | | |
|---|---|---|---|---|---|---|---|---|---|
| | A | B | C | D | E | F | G | H | I |
| Nevada III 1 (E) | 530 | 470 | 300 | 45 | 375 | 200 | 600 | 570 | 380 |
| Nevada III 2 (E) | 680 | 600 | 335 | 45 | 505 | 230 | 630 | 720 | 500 |
| Nevada III 3 (E) | 875 | 750 | 370 | 45 | 655 | 270 | 720 | 915 | 650 |

# 6. Unit installation

Wall-mounted

Suspended ceiling installations
(hot water variant only)

## 6.1. NK wall-mounting suspension

The heating unit is suspended in four suspension points on the unit casing using the NK set. The suspension points are accessible from outside and rivet nuts (M8 threads) are installed on the unit from production plant.

Upon special purchase order, the following is supplied as accessories to the NK wall-mounting suspensions:
2 pcs of wall mounted bracket, 4 pcs M8x30 - 8.8 bolt, 4 pcs of flat washer size 8, 4 pcs spring washers size 8.

The unit may be installed in parallel with a wall or slightly inclined in the bracket (refer to figure on the right) for optimized air flow. Pre-install the bracket onto the unit in the position selected in advance (the position is defined by identical hole symbols in the bracket). Measure out the position of the unit and the wall-mount. Mark the anchoring points and drill holes in the wall for installation of wall plugs (not included in the supply). Either hanging holes or fixed holes may be used for the installation. If opting for the hanging holes, do not tighten the screws to the wall plugs fully (only after the unit is received). If opting for round holes, tighten the screws through the bracket. Pay attention to fitting of full amount of bolts and all important fixing material.

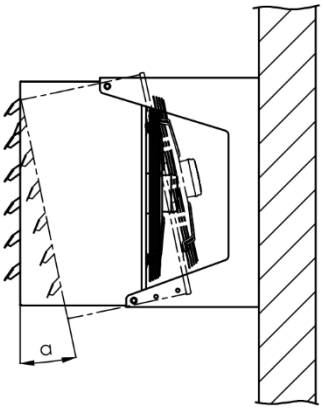


Positioning wall-mounted installation

Use quality anchors and wall plugs only. Consider installation situation and suitability of anchoring and installation material, including loading capacity of the structure properly. The manufacturer accepts no liability for improperly used wall plugs or other installation and hanging material.

Always suspend the device to all suspension points.

| Model | Angle α |
|---|---|
| Nevada III 1 | max 16° |
| Nevada III 2 | max 12° |
| Nevada III 3 | max 14° |

## 6.2. ZS-Nevada suspensions under ceiling

The heating unit is suspended in four suspension points on the unit casing. The suspension points are accessible from outside and rivet nuts (M8 threads) are installed on the unit from production plant.

Upon special purchase order, the following is supplied as accessories to the ZS-Nevada under-ceiling suspensions:
4 pcs M10x1000 - 8.8 thread bar, 4 pcs M10/40 anchor, 4 pcs M10 suspension lug, 8 pcs M10 - 8.8 nuts, 4 pcs M8x30 - 8.8 bolt, 4 pcs big flat washer size 8, 4 pcs spring washers size 8.

Measure the position of the unit and its distance from the ceiling, and cut the threaded bars to required length. Mark the anchoring points and drill ceiling holes for installation of the anchors. Fit the threaded rods into the prepared ceiling anchors and rotate the nuts. Fit ends of the threaded bars with suspension lugs. Set the unit to the required position and attach the suspension lugs to the unit using the bolts provided.

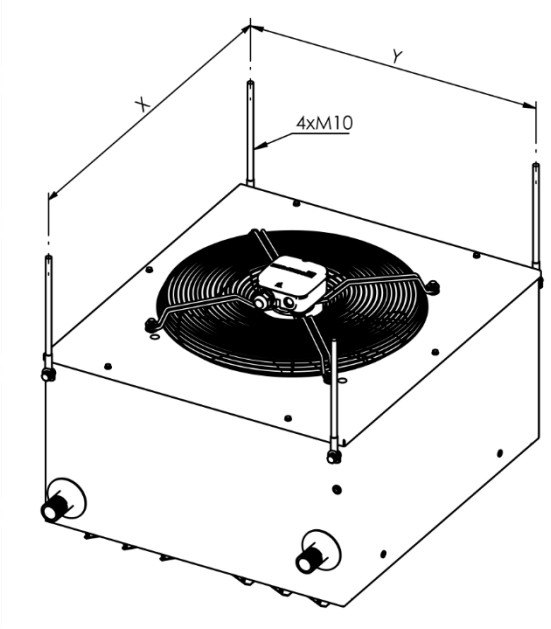


| Model | Dimension (mm) | |
|---|---|---|
| | X | Y |
| Nevada III 1 | 545 | 435 |
| Nevada III 2 | 695 | 565 |
| Nevada III 3 | 890 | 715 |

Keep minimum distance from the ceiling and wall in order to fully use the output of the unit. Regardless orientation of the assembly, always make sure that entry to the air curtain unit is spaced at least one fan diameter from the wall or ceiling.

Pay attention to correct fitting of all nuts to all assembly components. Pay attention to the end position of the threads to avoid loosening and falling the unit by rotation.

Use quality anchors and wall plugs only. Consider installation situation and suitability of anchoring and installation material, including loading capacity of the structure properly. The manufacturer accepts no liability for improperly used wall plugs or other installation and hanging material.

Following the assembly, check for horizontal position in both directions. Make sure that tightening up of individual hangers and sleeves do not cause crossing and twisting of the unit. Always properly consider loading capacity of the ceiling or of the wall. Install the device to structurally solid beams.

Always suspend the device to all suspension points.

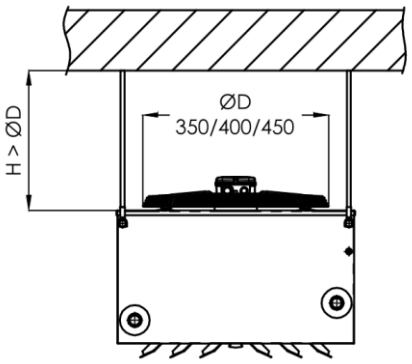


Installation distance from the ceiling by type of the unit

**Due to heat accumulation inside the unit, the electric heating unit must not be used for installation under ceiling!!!**

# 7. Connection of the unit to heating system

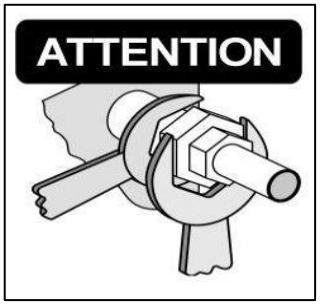


Please check all hot water connections for readiness and perfect condition before connecting media to the unit. Furthermore, please check the hot distribution for components or other measures to ensure zero transmission of static, dynamic, and dilatation forces at the input and output neck connections. No excessive force may be applied when connecting the hot water circuit of the building to the unit's heat exchanger. By the neck of the air conditioner there is a mark that notes use of two keys so that no stressing of the necks occurs in the course of tightening or loosening. **When bolting and tightening up the screw union of the heat exchanger must be secured by a clamp against undesired rotation that may subsequently result in deformations or damage to pipe necks on the heat exchanger**.

Considering the above the manufacturer clearly recommends that flexible connection hoses are used for connection of the heat exchanger necks (available as PPH accessories, length 300mm, DN 20, 25, 32) or a bellows compensator.

Any non-compliance with the instructions above results in rejection of any complaint.

The hot water heater necks are usually located on the left hand side of the unit (when viewed from the interior). The inputs are identified by round marks – **medium input red** with arrow pointing inside, and **medium output blue** with arrow pointing outside.

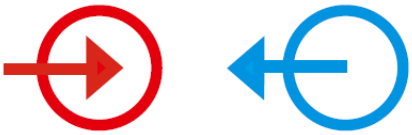

Media input Media output

Do not swap the return and supply neck positions - this may cardinally change performance and parameters of the heater with consequent impact on the hydraulic system. Do not exceed max temperature and pressure for which the unit is rated.

The value of thermostatic head is pre-set, and the function of the electrothermic valve drive is given by a control type. The connection is then made directly on the neck for media input (third neck is blind). For setting up the thermostatic head, refer to article 7.1 of the function of the electrothermic drive, refer to article 7.2.

Pay attention to quality of media fed to the unit; check for installation of cleaning valve downstream the unit (not included in the supply). Observe max temperature and media pressure to avoid heat exchanger damage. To make sure the heat exchanger operates correctly, drain the exchanger (sludge valve) and purge the cleaning valve because construction or assembly impurities may be present in the system. Deaerate the heat exchanger for perfect operation of the heat exchanger. Install the closing valves on both pipes downstream the unit (ball valves) ⋈. Connection thread right above the unit must be removable and not fixed.

As required by the customer, a not embedded 2-way or 3-way valve with control head can be delivered for the hot water heat exchanger. The valve drive may be either self-acting (thermostatic) or electrothermic.

Instructions for electric connection of the valve is included in the wiring scheme for connection of the unit. Specific wiring scheme or valve instructions are available upon request only.

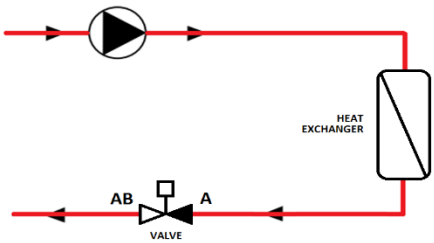


Connection of 2-way TV, ETVQ valve

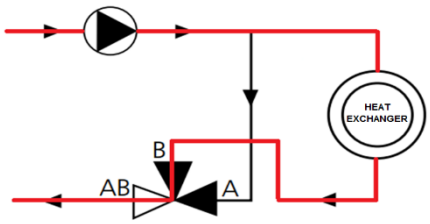


Connection of 3-way TV, ETVT valve

## 7.1. Heat exchanger control using a valve with thermostatic heat

The thermostatic head for 2-way (TV) and 3-way (TVT) valves is always supplied with the sensor separated (temperature range 25–65 °C) – exhaust air temperature control. Setting of the required closing temperature is made on the head scale (1–5). Temperature degrees with respect to the numbers on the head are expressed as follows:

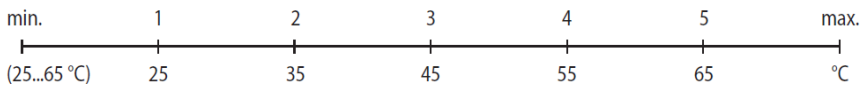


## 7.2. Heat exchanger control with a valve with electrothermic head

The electrothermic valve drive can be supplied to the hot water heat exchanger as not embedded either as 2-way (ETVQ) or 3-way (ETVT).

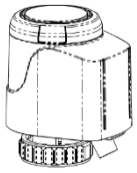

"Normally open" version (NO).

When the thermal drive is under voltage, the electrically heated sensor heats up Upon "dead time" expiration for continuous opening of thermic drive due to cooling down of the sensor.

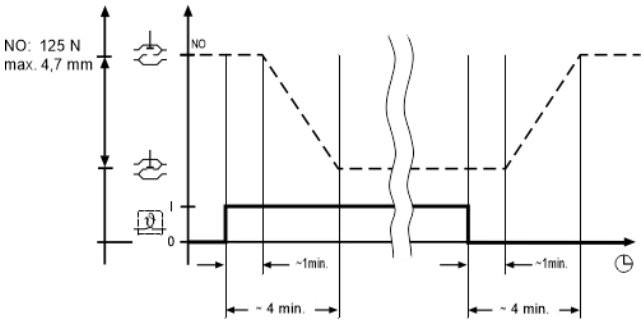


Note:

The time delay (dead time) needs to be considered during the functional test; the opening and closing time depends on surrounding temperature. Electric data: 230V/50Hz-3V, IP 54.

## 7.3. Setting of independent valve flow pressure (ETVQ)

**Setup**

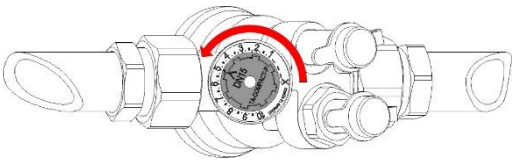

Turn the setting wheel to required value, e.g., 5.0.

**Closing**

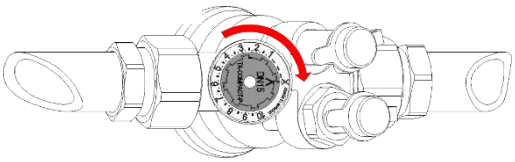

Turn the setting wheel counterclockwise to position X.

**$q_{max}$ values**

**Setup**

| | 1 | 2 | 3 | 4 | 5 | 6 | 7 | 8 | 9 | 10 |
|---|---|---|---|---|---|---|---|---|---|---|
| DN 20 | 210 | 335 | 460 | 575 | 680 | 780 | 890 | 990 | 1080 | 1150 |
| DN 25 | 370 | 610 | 830 | 1050 | 1270 | 1490 | 1720 | 1870 | 2050 | 2150 |

$q_{max}$ = l/h for each setting with the control cone fully open

# 8. Types of controllers and options for controlling

## 8.1. Nevada heating hot water units – 230V

### Ox

The O series controller is a five-step transformer controller of revolutions for fans powered by 230V and provided with a standalone button for light signalling of the connection. The O series controllers allow for connection of multiple units. The selection of an appropriate controller type must consider the power input of the unit (output power limitation in “A”).

| Type of control | O2 | O3 | O5 | O7 | O10 |
|---|---|---|---|---|---|
| For max. unit current | 2A | 3A | 5A | 7A | 10A |
| IP rating | IP 54 | | IP 54 | | IP 54 |
| Dimensions (w x h x d) | 86x166x91mm | | 123x240x125mm | | 146x272x140mm |

### UNIREG

UNIREG is the distribution board suitable for hot water units with 230V motor where it is not possible to integrate the control electronics into the unit. The system permits the use of all functions offered by Ditronic Touch and Econ controllers, or BMS input switch. The selection of an appropriate Unireg type must consider the power input of the unit (output power limitation in “A”). **For each of the controllers (Ditronic or Econ), refer to specific user manuals.**


| Type of control | Unireg | | | | | | | | | | | | | | |
|---|---|---|---|---|---|---|---|---|---|---|---|---|---|---|---|
| | DIT 4,5 | DIT 6 | DIT 9 | DIT 14 | ECON 4,5 | ECON 6 | ECON 9 | ECON 14 | BMS 4,5 | BMS 6 | BMS 9 | BMS 14 | DIT EC | ECON EC | BMS EC |
| For max. unit current | 4,5A | 6A | 9A | 14A | 4,5A | 6A | 9A | 14A | 4,5A | 6A | 9A | 14A | 14A | 14A | 14A |
| IP rating | IP 20 | | | | | | | | | | | | | | |
| Dimensions (w x h x d) | 300x400x170mm | | | | | | | | | | | | | | |

## 8.2. Nevada heating hot water units – 400V

**OTx**

Revolutions switch 0-1-2 for 400V motors without option for connection of the door contact. Connection of the room thermostat is a standard feature. The selection of an appropriate controller OT type is given by the power input of the unit.

| Type of control | OT4 | OT8 | OT10 | OT15 |
|---|---|---|---|---|
| For max. unit current | 4A | 8A | 10A | 15A |
| IP rating | IP 65 | | | |
| Dimensions (w x h x d) | 275x220x140mm | | | |

## 8.3. Nevada electric heating units

The ECON controllers are intended for control of the fan and electric heater (hot water and electric) with possible connection of external components (door contact, room or exhaust thermostat). These types of basic controls do not allow linking of the controllers (except for Econ DUAL). Controller function is defined by type of the electric documentation. The controller is designed for wall-mounted installation and a separate instructions manual is available.

For relevant electric wiring scheme, refer the lid for electric connection in the unit. The scheme for a supplied product is valid but it may be modified upon request of the customer or for production reasons depending on a specific request. The connection between the air curtain and the controller is carried out using a 10-wire cable (not included in the supply).

ECON controller

ECON-COM-ET control board

The ECON DUAL permits controlling of two units at the same time.

# 9. Electric connection of the unit

The heating unit must be protected by a suitable circuit breaker according to its electric parameters – refer to attached electric wiring. The connection terminals on the hot water unit are accessible after unscrewing the cover of the fan wiring box. The connection terminals on the unit with electric heater are accessible after unscrewing the cover. Connect the ready-to-install cables to the terminals following the attached electric wiring schemes, make connection check, equipotential bonding, and finally turn the power supply on. Use the cable wires with cross section suitably rated according to the current load – refer to electric wiring documentation.

Make sure the cable is neither twisted nor deformed in any way. Keep free ends of the cable wires sufficiently long for easy handling and cut the wire only after you are sure the wire is long enough.

Observe generally applicable national provisions, particularly ČSN 12 2002 and other related regulations. Unplug the unit from mains before any service intervention. Provisions of ČSN 332190, 332000-5-51 ed. 3, and 33 2000-5-54 ed. 3 must be observed for connecting and earthing of the electric devices. Qualified electrician only may perform any electric service works (qualification according to Section 6 of Decree of ČBU No. 50/78 Coll.).

During assembly, carefully check everything and carry out the initial review of the device. Check operation of the FU1-FU3 electric fuses (Ditronic) for interior circuits (for fuse values, refer to the box of electronics), and make sure that the external components (accessories), which may have an essential impact on correct function of the device, operate.

**ATTENTION: The delivery note serves as a warranty sheet!**

## 9.1. Unlocking of emergency thermostat

**The units fitted with the electric heater** are provided with operation thermostat with automatic reset feature (located on each heater) and emergency thermostat with manual reset.

When permitted limit temperature inside the unit is exceeded, heating circuit is turned off by the emergency thermostat = pushbutton sprung up. The button is used to unlock the safety thermostat in case of the device failure. After cooling down the thermostat button needs to be pressed back to default position. (refer to figure).

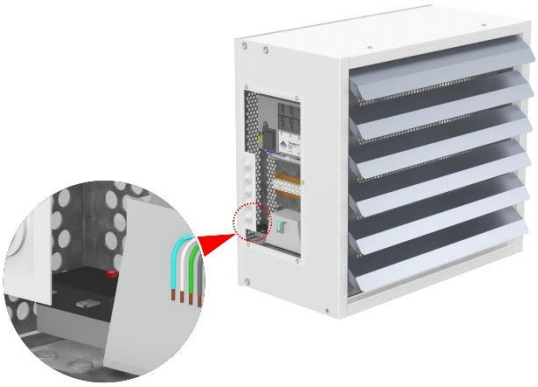

**ATTENTION – unblocking of the emergency thermostat does not resolve failure of the unit! Always remedy the cause of the thermostat overheating!!!**

Covering of the air curtain with any strange objects is prohibited ►risk of fire !!!

# 10. Commissioning, starting of the unit

Before commissioning make and check:

- covers and shell of the unit are in perfect condition,
- mechanic fixing and anchoring of the unit,
- fixing of thermostatic head and its setting,*/**
- function of circulating pump (not included in the device),**
- correct connection of media and tight connections,**
- tightness and function of the valves,*/**
- availability of power voltage,
- correct connection of all unit cables,
- fitting and setting of a pre-circuit breaker (not included in the device),
- free from mechanical impurities or objects.

* if installed
** hot-water version only

Initial review of the electric appliance according to ČSN 331500 and ČSN 33 2000-6-61 ed. 2 must be made upon commissioning.

# 11. Optional accessories - depending on equipment level

The most frequent accessories include thermostatic or electrothermic valves for the temperature control (chapter 7.1 and 7.2). The valves are supplied as **not embedded**, for all available valve types refer to the catalogue.

An optional accessories may be e.g., room thermostat, hanging of the unit, 0–10V signal control of the unit over the superior BMS, and more. Selection of an appropriate type of accessories must be supported by the controller type.

For all accessories offered for the Nevada unit, refer to the catalogue documentation.

# 12. Basic service and maintenance information

All units are thoroughly checked and tested by the manufacturer before dispatch. The most frequent errors root from misunderstanding of the unit function or incorrect cabling and connection. For this, observe instructions from the manufacturer to avoid complex troubleshooting. In no case try to operate the unit when connected in a different way - the unit may operate for a while as you wish or expect but this irreversible step may result in damage beyond repair and loss. No warranty claims can be accepted with respect to this damage.

The Nevada heating units are supplied **without a filter** in front of the heat exchanger in standard, and therefore, special attention needs to be paid to the heat exchanger condition check. The regularity of checks depend on environment in which the device is operated. To access the heat exchanger, demount the upper plate of the unit (with a fan) being fixed around the circumference by bolts.

**Before any work with the unit, disconnect the electric power supply, mains supply for the unit. Electric shock hazard !!!**

Observe generally applicable national provisions, particularly ČSN 12 2002 and other related regulations. Unplug the unit from mains before any service intervention. Provisions of ČSN 332190, 332000-5-51 ed. 3, and 33 2000-5-54 ed. 3 must be observed for connecting and earthing of the electric devices. Qualified electrician only may perform any electric service works (qualification according to Decree of ČBU No. 50/78 Coll., § 6 is required.

Please contact your vendor or distributor for a service agreement. You will get regular service and excellent care of your unit.

Quarterly checks:

- Unit hanging and tightening of all bolt connections. Then, check tightening of bolts of exhaust splines.
- Disconnect the closest fan from the power box to check the space of the heat exchanger and to remove dirt or objects, if any. Then, demount the top plate with the fans. Use vacuum cleaner to remove dust from the heat exchanger. When using steam for cleaning, set as lowest temperature as possible and as lowest pressure as possible for not to damage the heat exchanger.*
- Before winter, check in particular the anti-frost protection function (applicable to the variant with Unireg DIT controller), superior circulating pump (not included in the supply of the device), setting of thermostatic or electrothermic valve.*
- Re-test tightness of the unit or of installed fittings on the water side. If a sludge filter is installed before the unit – clean the filter and check deaeration of the heat exchanger.*
- Check cleanliness of the motor suction grid and inner or outer parts of the unit. Do not wash the motor body with water! Wipe with lukewarm towel only – motor winding damage hazard; after the motor is cleaned, do not turn the unit on for at least 60 minutes – let the unit dry. Use vacuum cleaner to remove dust from the suction grid. Proceed carefully when wiping the exhaust splines!
- Check unit safety with respect to electric shock hazard according to applicable ČSN or national standards, including earthing inspection.
- Thorough cleaning of the exhaust splines (tighten up, if necessary).

* if installed

## 12.1. Troubleshooting

| Problem | Possible cause | Remedy |
|---|---|---|
| The unit can not be turned on | Unit circuit-breaker is off | Turn on |
| | Mains failure | Inspection |
| | Anti-freeze protection* (refer to Unireg DIT) | Inspection |
| | Controller position “0”* | Check, > position than “0” |
| | External contact* | Check connection or interconnection |
| Noisy motor | Defective motor mount | Check - replacement |
| Motor overheats (motor thermal contact turns off) | Defective motor mount or winding | Replace fan unit |
| | Heavily soiled motor – insufficient cooling | Check, clean |
| | Excessive temperature of intake air | Inspection |
| The fan delivers little air only | Soiled suction grid of the fan | Check – clean |
| The unit does not heat | Broken or clogged medium supply | Check - replacement |
| | Little air flows through the heat exchanger | Check - remove |
| | Soiled heat exchanger splines | Check – clean |
| | Insufficient media temperature | Remove |
| | Medium does not circulate | Check, deaerate |
| | Temperature achieved in line with controller setup | Controller setup |
| | Defective drive of electrothermic valve | Check setup, or replace if defective |
| Automatic operation disconnection | Overheated motor | Find out and clear the cause |
| | External clock | Check correct function (refer to controller description) |

* if installed

# 13. Decommissioning – disposal

After the expiration of the service life, the unit must be disassembled and disposed of. Only qualified company may disassemble the device. The product or components thereof must be disposed in environmentally-friendly manner at the end of its service life.

The components of the unit must be separated and sorted out by type of material for disposal. Dispose of the metal and plastic components at your local collection yard. The transport packaging of the product is made of common recyclable material (paper, polyethylene, wood) and is labelled as such according to ČSN 77 0052-2.

As far as disposal is concerned, it is operator’s responsibility to comply with applicable national provisions in the country of use. In addition, follow regulations and laws of your country applicable to waste disposal. Separated collection and recycling of the products may help to protect environment and human health.

# 14. Important notes

The heating unit covers losses of the heated room. Other uses are not intended. The manufacturer accepts no liability for damage resulting from use other than intended. Observe this manual in operation of the units.

Installation, electric connection, and repairs must be carried out by qualified persons according to § 6 of Decree No. 50/78 Coll. or according to applicable national standards and regulations. An expert company is needed to connect the heating medium.

Before the start of the heating season, it is necessary to provide the required amount of heating medium with the design values for units with the hot water heater.

**The manufacturer reserves right to changes for marketing or production reasons without prior notice!**

**STAVOKLIMA s.r.o.**
Budějovická 450, 370 01 Homole
Tel.: +420 387 001 931
e-mail: info@stavoklima.cz
www.stavoklima.cz